fermliving.com

COLLECT LIGHTING

ASSEMBLY MANUAL

5106 - 5108 - 5110 - 5112 - 5116 - 5129 - 5131 - 100113-502
5107 - 5109 - 5111 - 5113 - 5117 - 5130 - 5132 - 100115-502

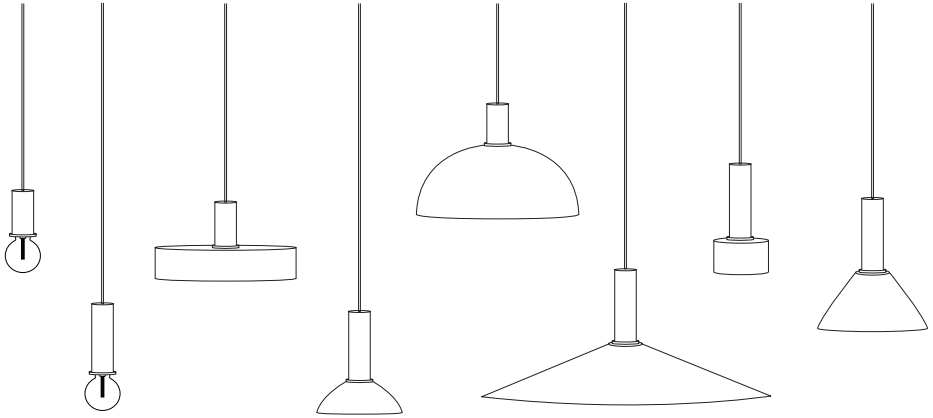

ferm LIVING

CONTENT OF THE BOX

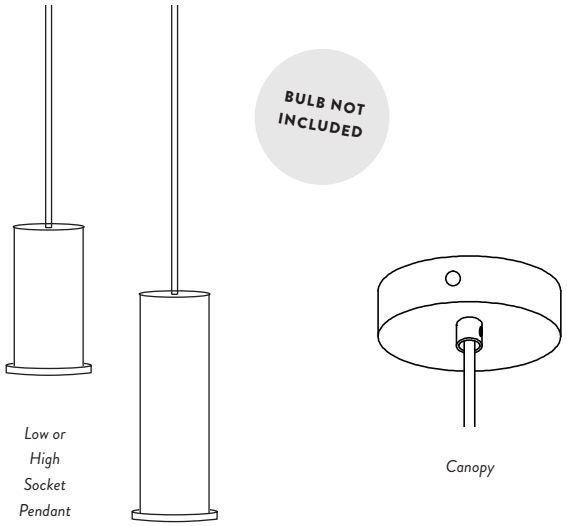

In the box, you will find one of the Collect Lighting socket pendants with a matching canopy - and:

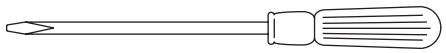
x 1

x 1

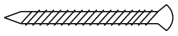
x 2

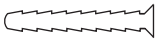
x 2

ASSEMBLY PROCESS

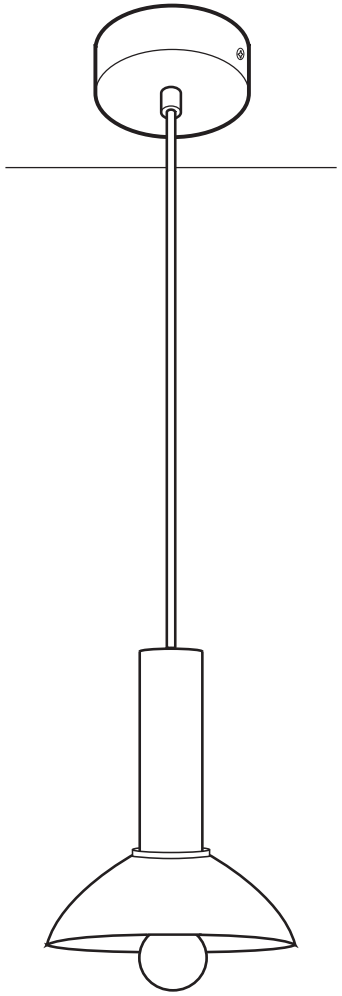

A

ASSEMBLY PROCESS

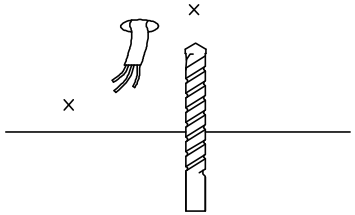

OPTION B1

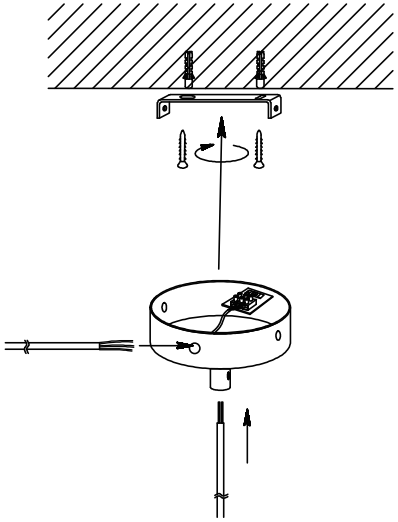

OPTION B2

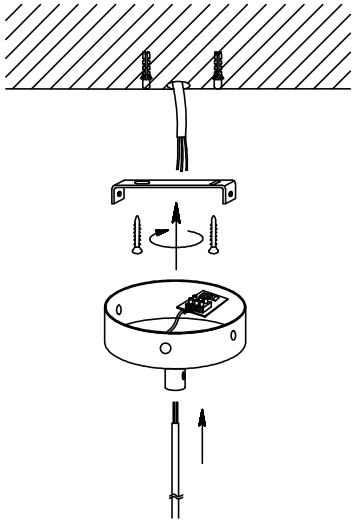

C

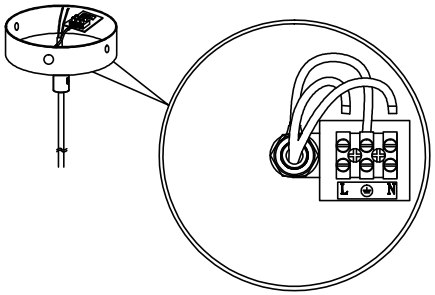

D

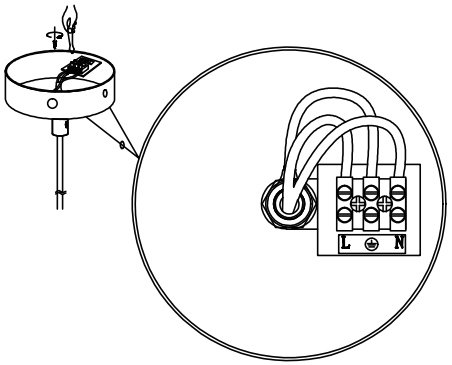

E

ASSEMBLY PROCESS

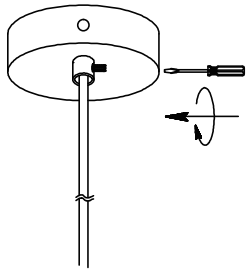

OPTION F1

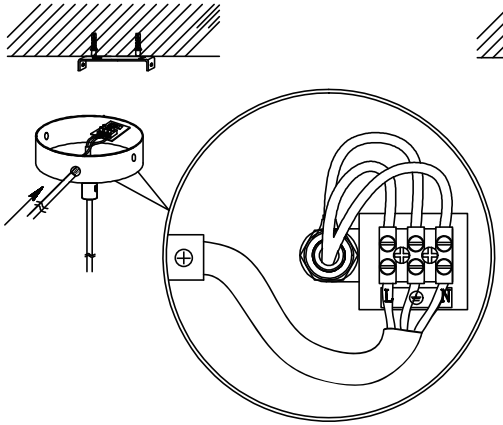

OPTION F2

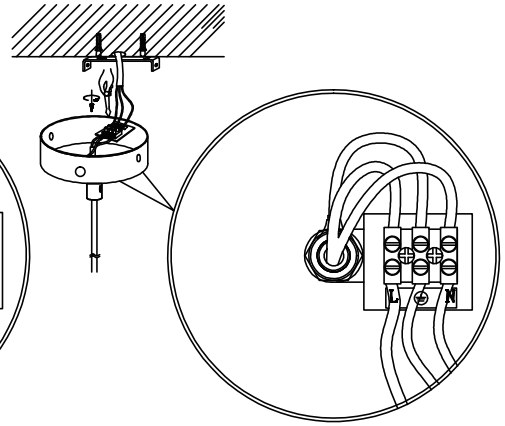

G

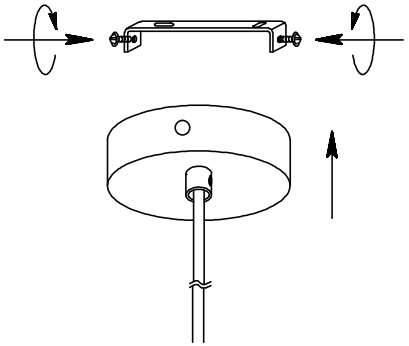

ASSEMBLY PROCESS

1.

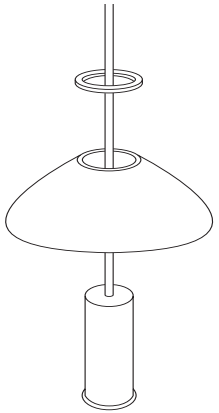

2.

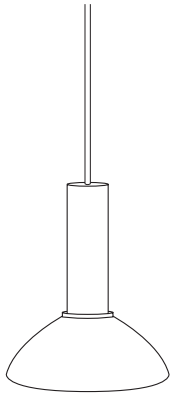

3.

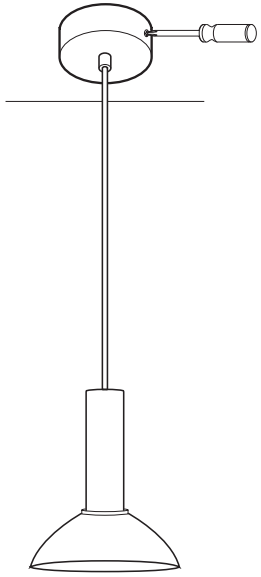

4.

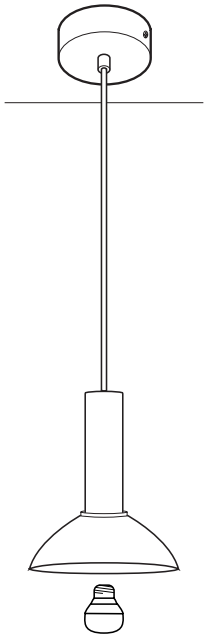

LAMPS RATING & BULB SPECIFIKATION

Voltage :	220-240V
Frequence :	50Hz
IP Rating :	IP20
Classification :	Class I
Socket :	E27 socket base.
Recomended light source :	Max. 25 W / CFL Max. 13 W LED G95 or G125
Energy efficiency :	The luminaire is compatible with bulb of the energy classes: A++-E.
Dimmable :	Yes, when using a dimmable bulb
Certification :	CE approved: This product has been assessed and complies with the essential requirements of the relevant European directives.
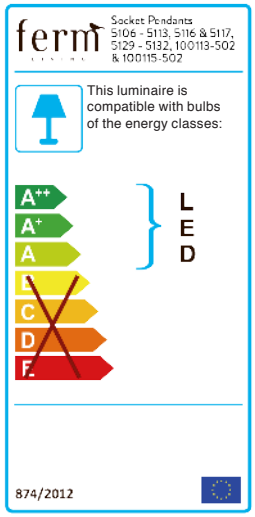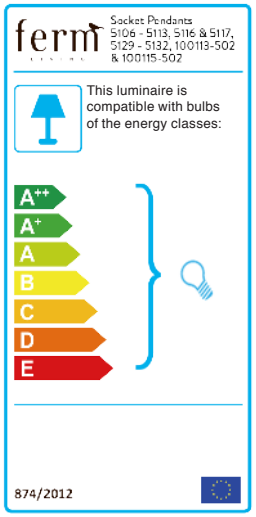
Assembly :	Due to earth connection (Class I) mounting of this lamp should be carried out by a licened electrician. For option 1, the cable need to be VDE certified H03VV-F3*0.75MM or higher class with diameter 6.2 mm max.
Attention :	If the external flexible cable or cord of this luminaire is damaged, it shall be exclusively replaced by the manufacturer or his service agent or a similar qualified person in order to avoid a hazard.
Care & cleaning :	Clean with a soft dry cloth. Always switch off the electricity before cleaning.